THC

THE HYDRAULIC CENTRE

PRODUCT **CATALOGUE**

THC.CO.ZA

TABLE OF CONTENTS

G - Components 2
Tanks 3
• OMM 4

G - COMPONENTS

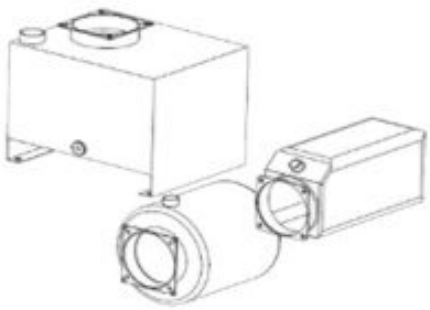

TANKS - FOR MINI POWERPACKS

E60303006
E60303011
E60303012
E60303015
E60303048
H60303025
H60303033

Read More
SKU: 342
Price:
Categories: • OMM, G - Components, Tanks
Tag: OMM

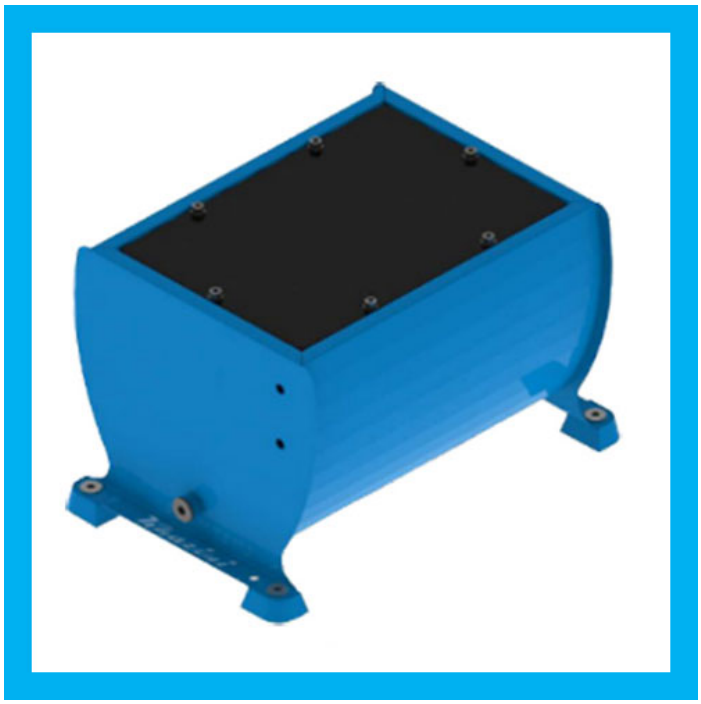

TANKS

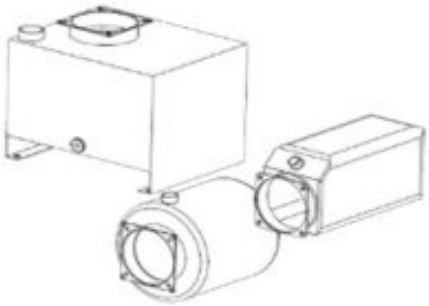

TANKS - FOR MINI POWERPACKS

E60303006
E60303011
E60303012
E60303015
E60303048
H60303025
H60303033

Read More
SKU: 342
Price:
Categories: • OMM, G - Components, Tanks
Tag: OMM

• OMM

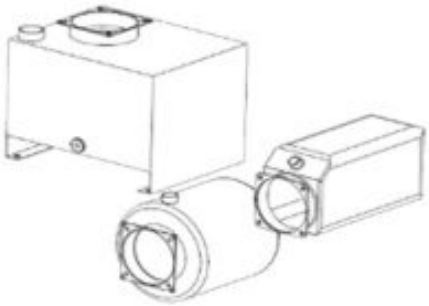

TANKS - FOR MINI POWERPACKS

E60303006
E60303011
E60303012
E60303015
E60303048
H60303025
H60303033

Read More
SKU: 342
Price:
Categories: • OMM, G - Components, Tanks
Tag: OMM

INDEX

T

TANKS - FOR MINI POWERPACKS 2-4

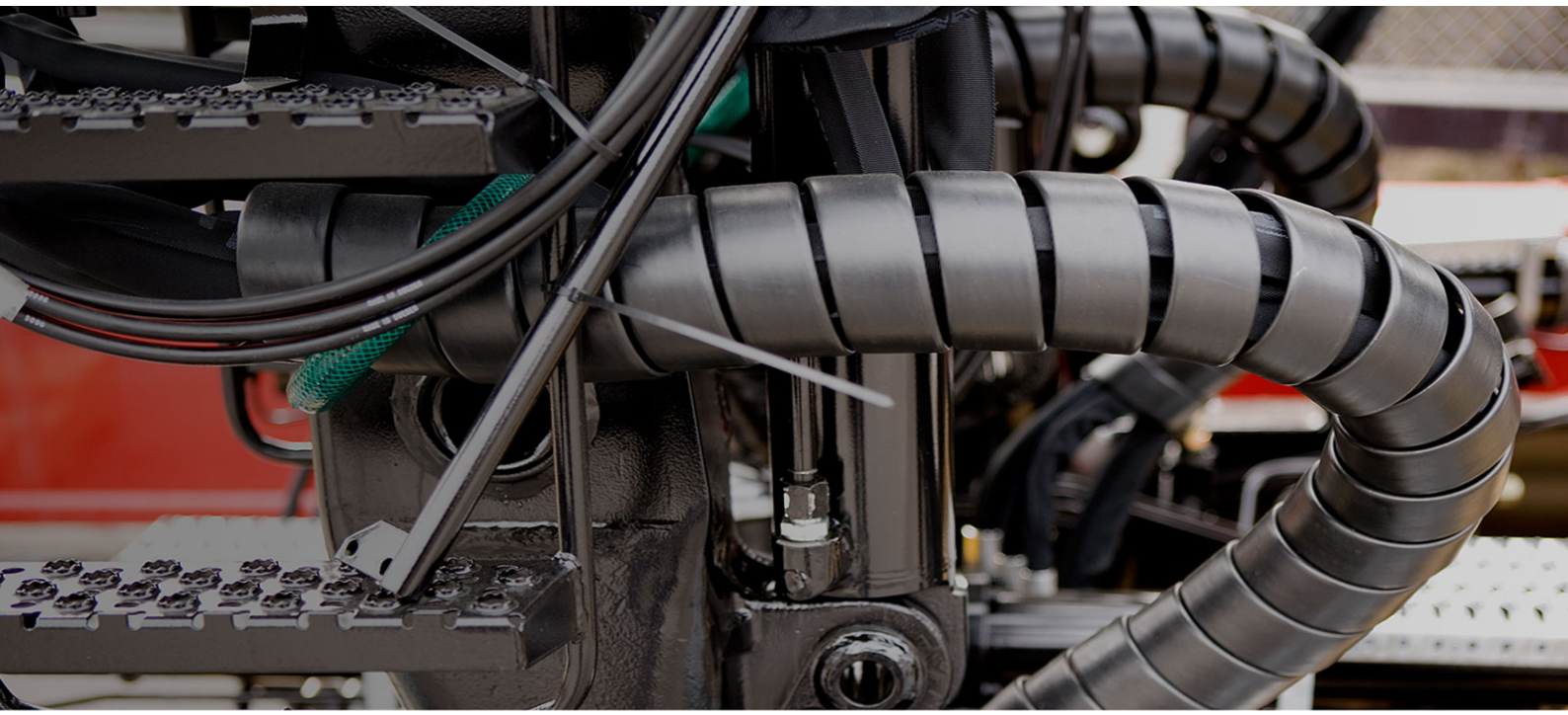

THC.CO.ZA

THE HYDRAULIC CENTRE